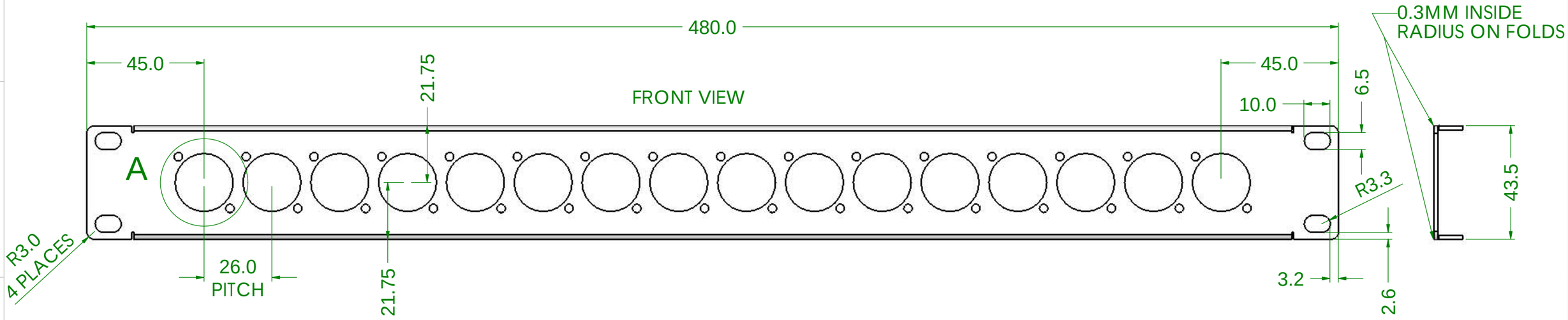

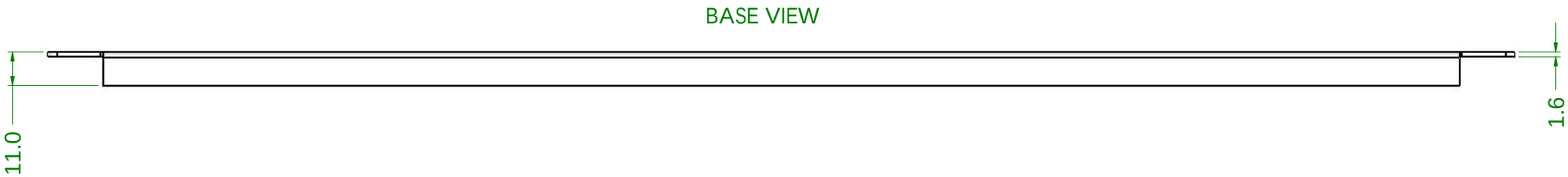

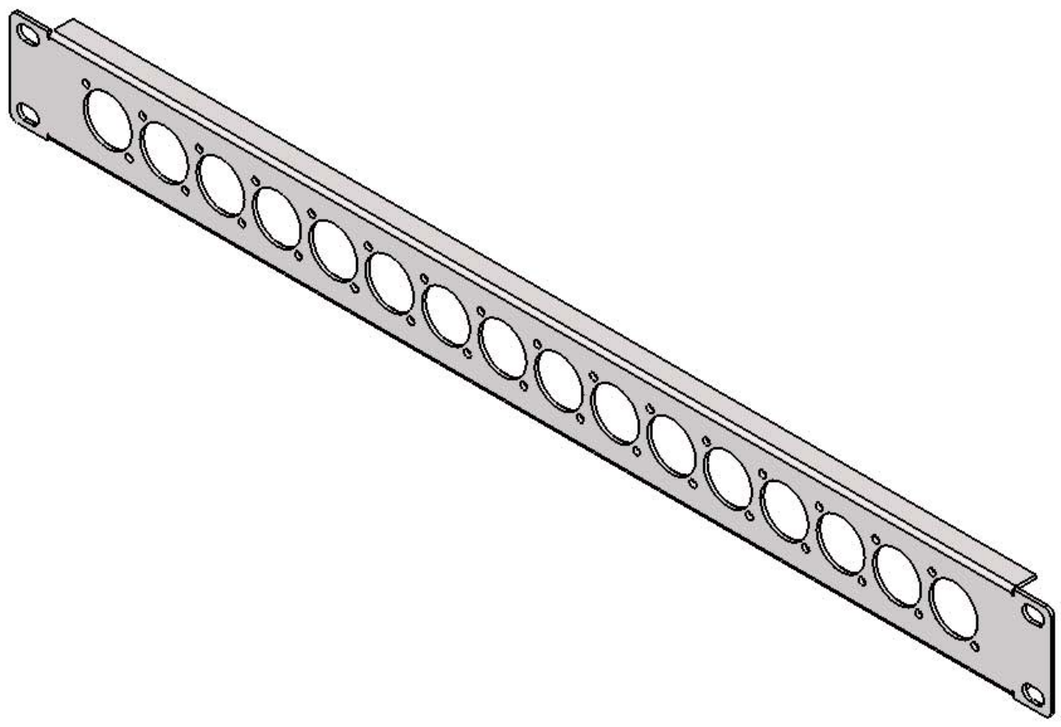

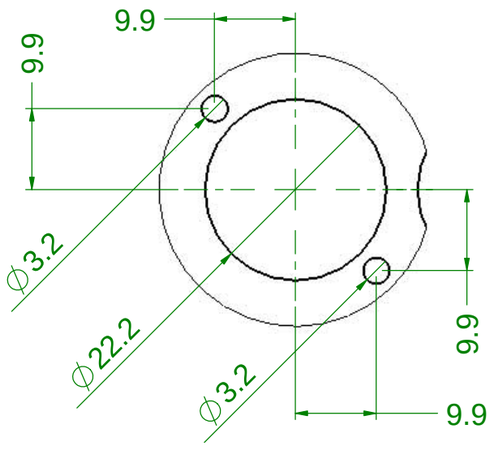

DETAIL A
CUTOUT DIMENSIONS
(APPLIES ALL 16 POSITIONS)

LSC Lighting Systems Pty Ltd www.lsclighting.com.au

TITLE: DNA2 1RU 16-WAY XLR CUTOUT

	NAME	SIGNATURE	DATE
DRAWN	DB		7 AUG 2013
CHK'D			
APPV'D			

MATERIAL: 1.6mm Zinc Steel

DWG NO. DNA2_M01M-A0

REVISION A0

All Dimensions in mm
DO NOT SCALE DRAWING
Any threads must be paint free
Remove all burrs and sharp edges
Outer surface to be free from scratches/blemishes

FINISH: PowderCoat Texture Black

PART No MTL806A

- Tolerance +/- 0.3mm

Folder Q:\WIP\DNA2\MECH\Drawings\